Diritti riservati All rights reserved

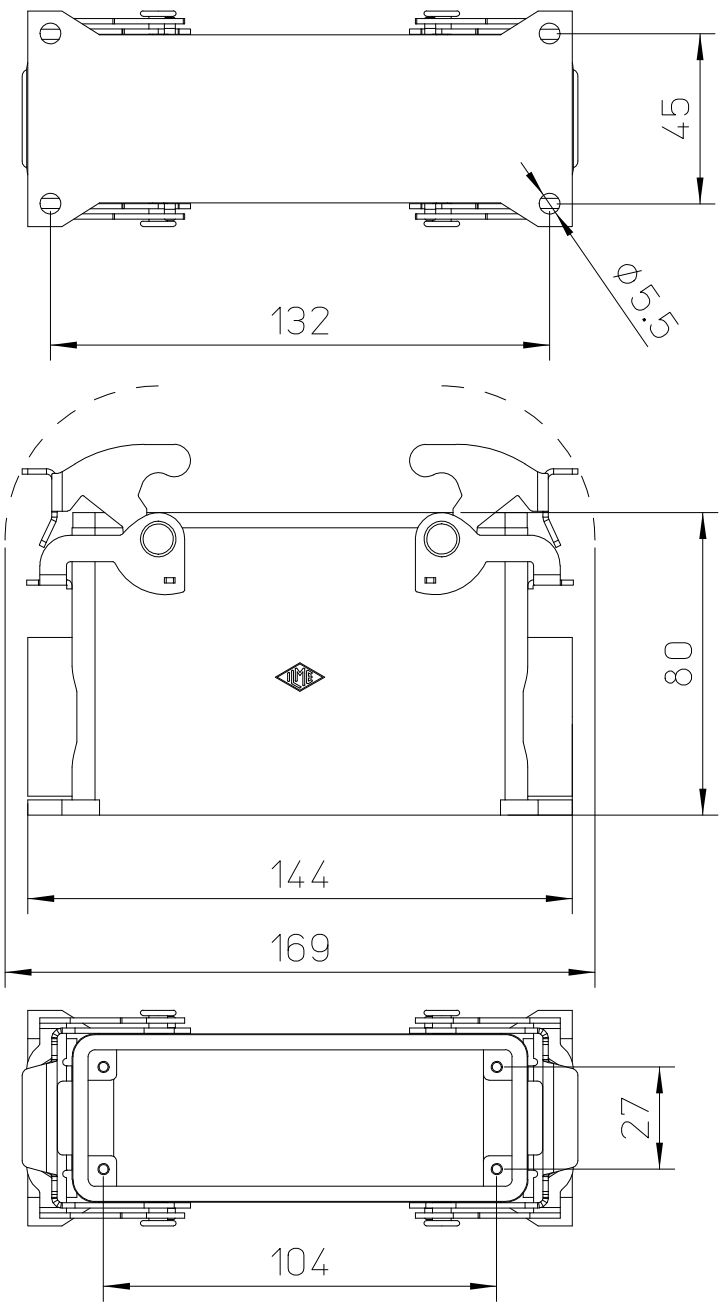

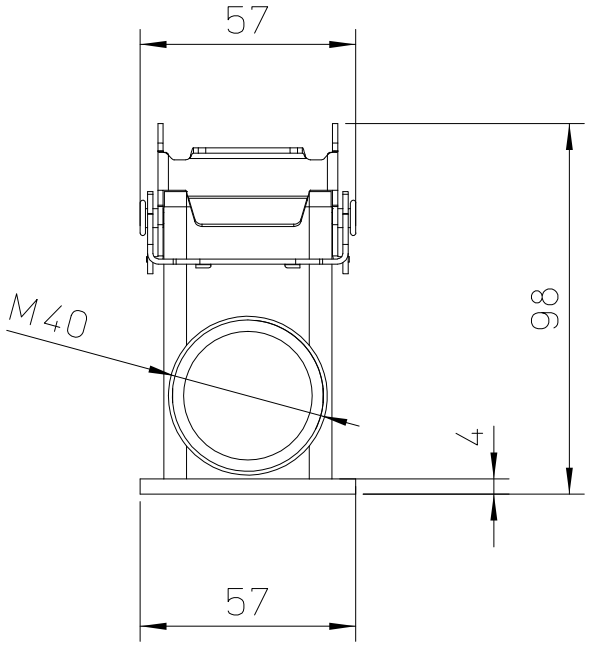

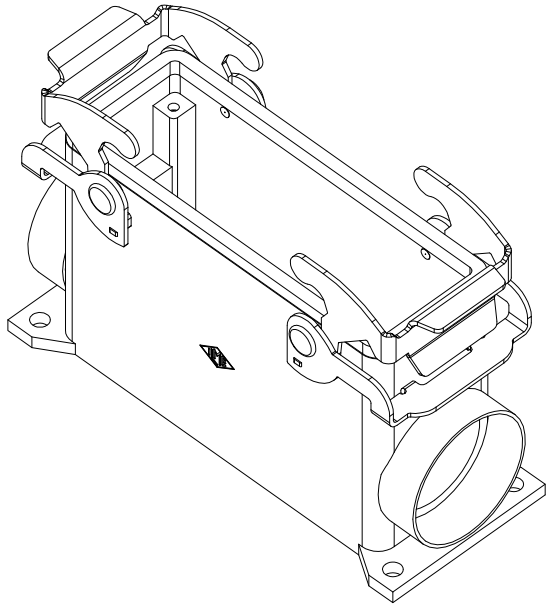

dimensions in mm		M7AP 24.40
Date	08/04/17	Surface mounting housing, M40, 2 levers
Sign.	C. Mainini	

Scale 1:2